| REVISIONS | | | | |
|---|---|---|---|---|
| ZONE | REV | DESCRIPTION | DATE | APPROVED |
| | A | REDRAWN | 02JAN97 | |

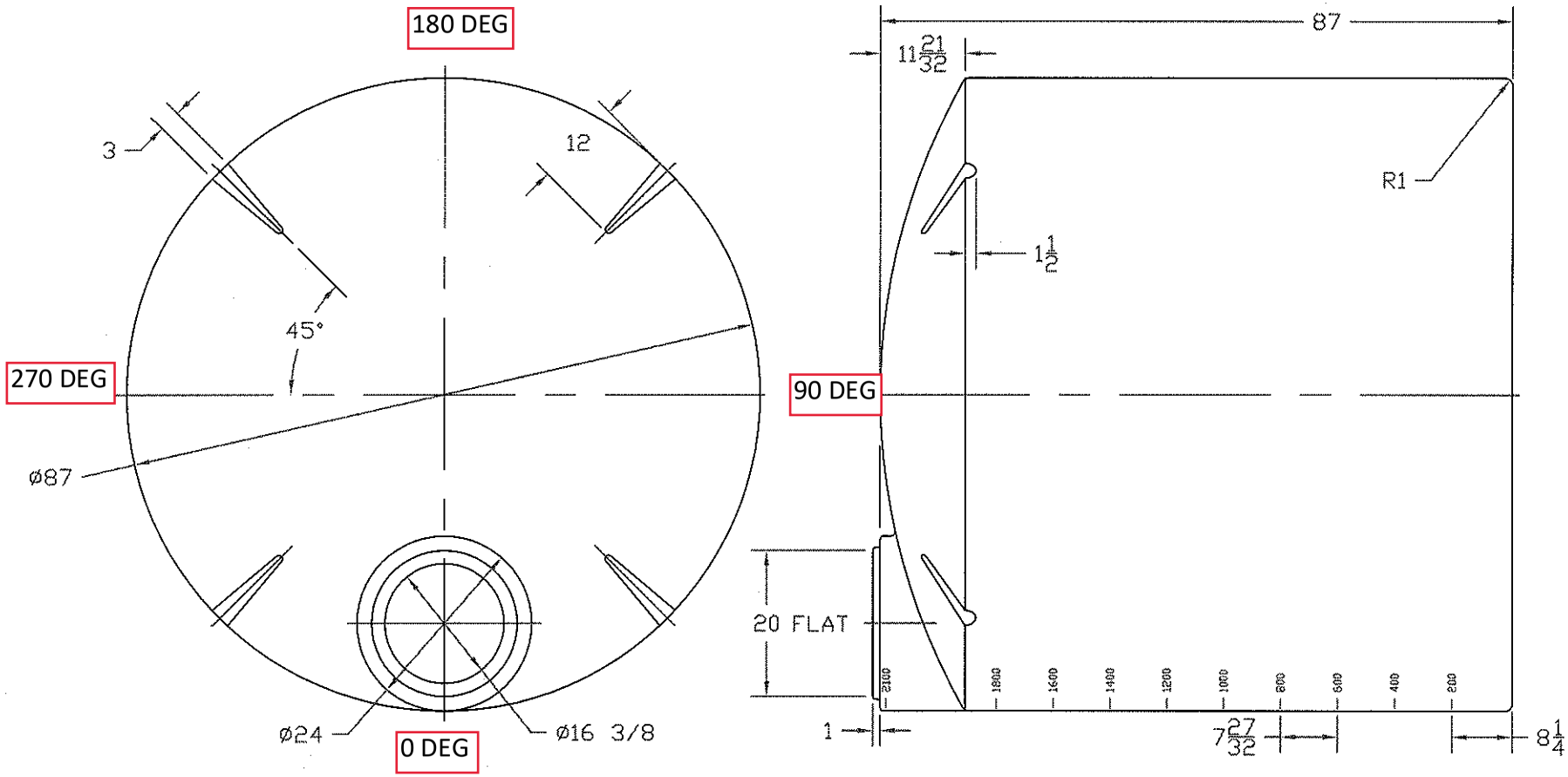


NORWESCO
ST. BONIFACIUS, MN

2100 GALLON VERTICAL TANK

| | | | | |
|---|---|---|---|---|
| JTP 19AUG97 | SIZE B | FSCM NO. | DWG NO. | REV A |
| | SCALE 1/16 | | SHEET | |