REVISIONS				
ZONE	REV	DESCRIPTION	DATE	APPROVED
	A	REDRAWN	22AUG97	

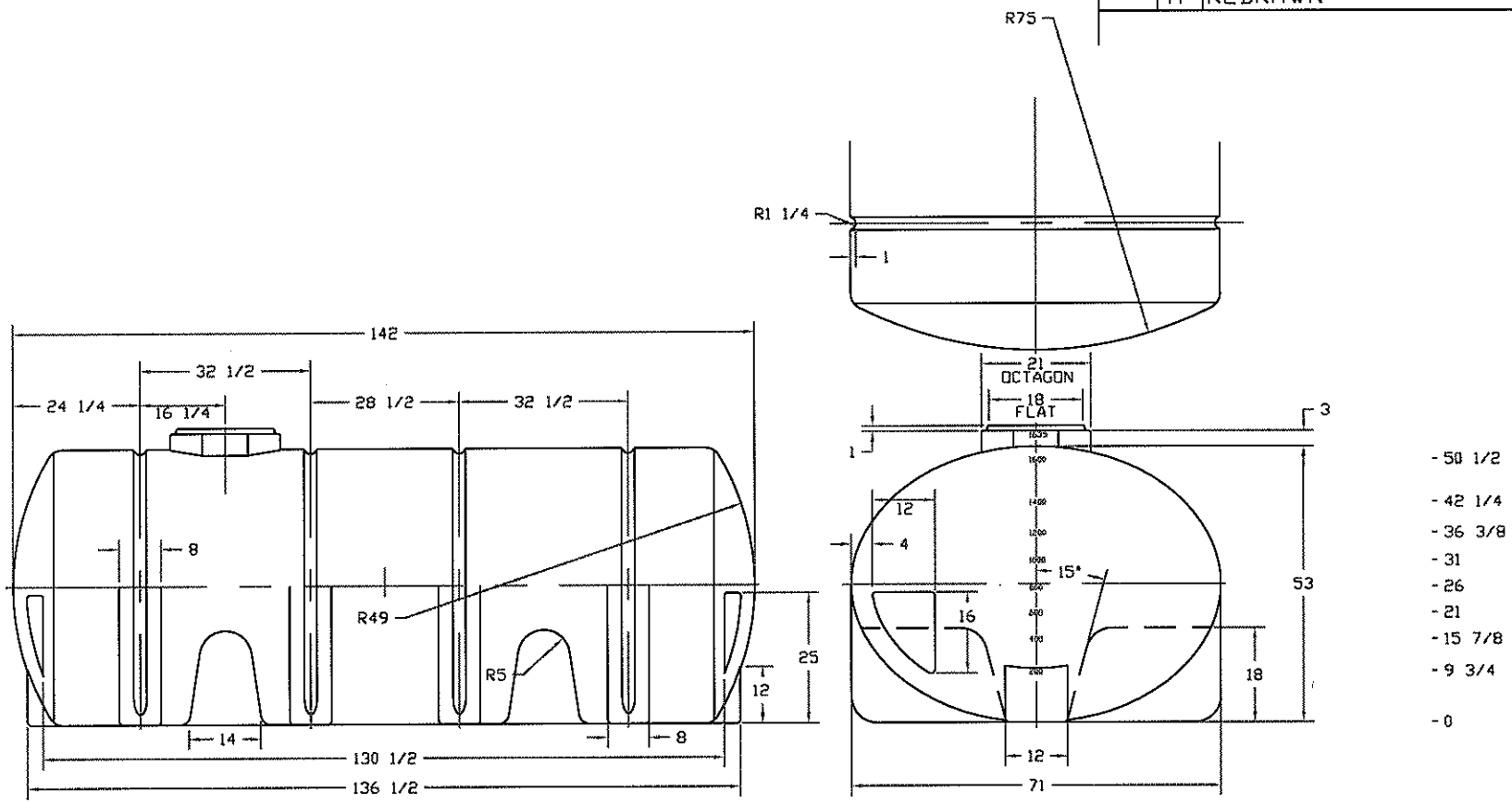

NORWESCO
ST. BONIFACIUS, MN

1635 GALLON ELLIPTICAL LEG TANK

JTP 22AUG97	SIZE B	FSCM NO.	DWG NO.	REV A
	SCALE 1/24		SHEET	